LTR	Zone	REVISION RECORD / Description	DWN/CHK	DATE	LTR	Zone	REVISION RECORD / Description	DWN/CHK	DATE
1		New Release		Jun/8/07					
2	E-3	Change cable L: 90-->50mm (Old P/N JS3_05013G-I32)		Jul/19/07					

DRAWING NUMBER
JS3_05013G-I32

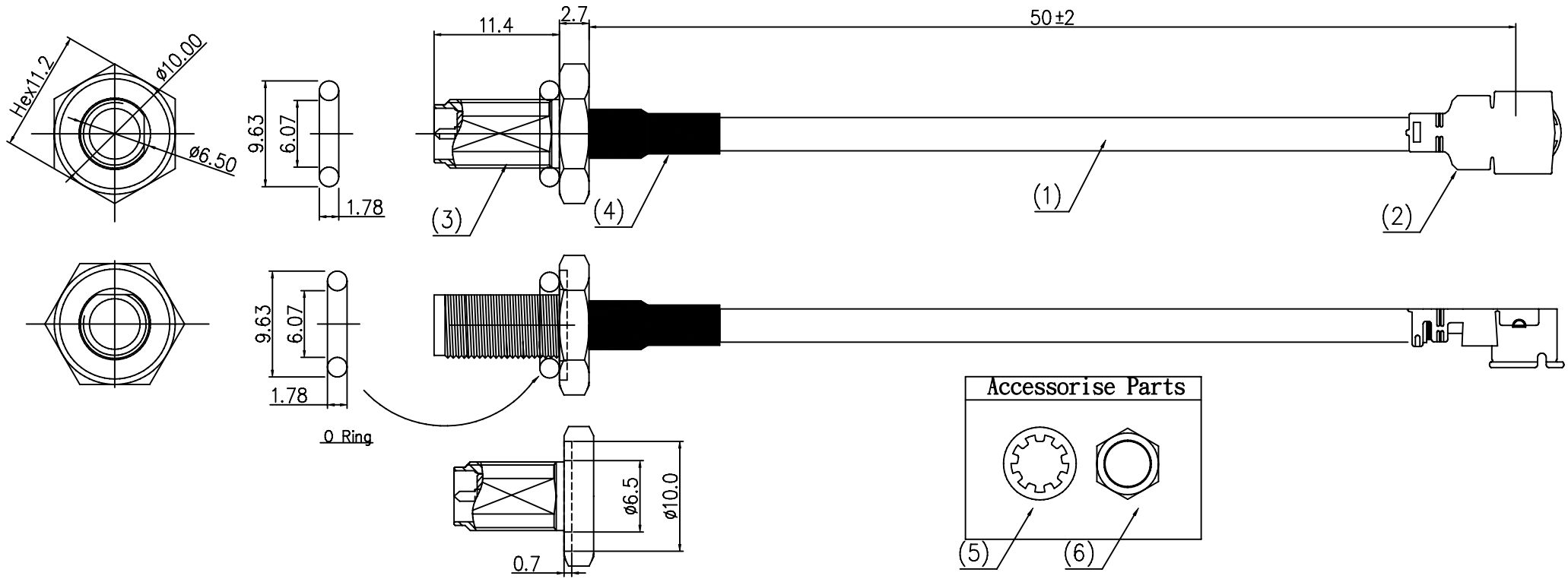

NO	DESCRIPTION	Q'ty	MATERIAL	Part Number
9				
8				
7				
6	Nut	1	Brass	
5	TOOTH WASHER	1	Brass	
4	SHRINK TUBE ø 3-3.5 BLACK	1		M05-030G03-BL
3	RP-SMA-J(11.4) Blk HEX11.2 Oring(9.63)	1	Brass	M01-SMJH11-096
2	I-PEX PLUG (20278-111R-13)	1	Brass	M01-MHF113-00
1	COAXIAL CABLE ø1.13 Gray	1		M02-113GBR-GR

UNIT	mm
APVD	
MATERIAL	SEE NOTE
CHK	
FINISH	SEE NOTE
DWN	Kaven

DESCRIPTION:
JC SMA(F/M) Hex11.2 Blk(11.4)-113(G)IPEX L50mm

1 PLC ±0.5
2 PLC ±0.3
3 PLC ±0.2
ANGLES ±5°

PART NUMBER	REV
JS3_05013G-I32	2

SIZE	SCALE	SHEET
A4	1/1	1 OF 1